Percussion Play
Outdoor Musical Instruments

Installation Instructions

Surface Fixed

Cadenza
Page 1 of 3

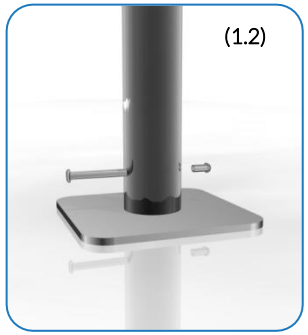

Weight of heaviest part 7kg (Cadenza) SD
Weight of heaviest part 13kg (Cadenza) HD

1. Attach the steel legs to the base of the instrument with the M8 Nyloc Nuts and 2 part security caps. **(1.1) (See Assembly Guide)**

2. Attach Surface Fixing posts to legs. **(1.2) (See Ground Fix Post Installation Sheet)**

3. **Locate Plate** in desired location and mark holes to fix to desired surface.

4. **Fix to Surface using recommended ground anchors not supplied.**

5. Make sure all fixings are covered and secure using cover caps provided.

6. Attach the 1 pair of beater to the saddle strap on the leg. **(1.3)**

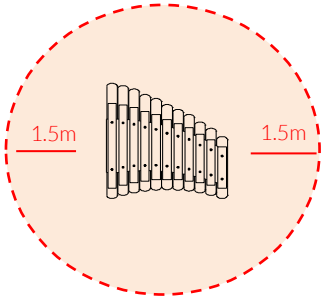

Install Instrument with 1.5m free space (from widest point) around it.

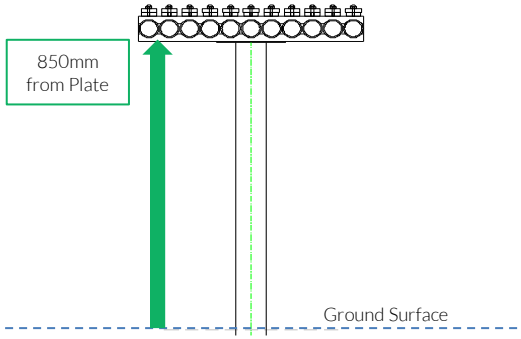

Instrument Components:

- x4 M8 Nyloc Nut
- x2 M6x20 Security Screw
- x4 2 Part Cover Cap
- x1 M6 Saddle Strap

Metric Conversion:
250mm/ 10"
300mm/ 12"
450mm/ 18"
850mm/ 33"
1.5m/ 59"

MADE IN BRITAIN
BS EN 1176

Pair Small Red Beaters X1

Surface Fix Components:

- x1 M10x70 Security Screw
- x1 M10 Barrel Nut
- x4 2 Part Cover Cap

Ground Anchors not supplied

Spares available from percussionplay.com or from your local distributor

18 -24Kg

Assembly Guide PPCADE

Percussion Play
Outdoor Musical Instruments

Surface Fixed

Cadenza
Page 2 of 3

Instrument Components:

- x4 M8 Nyloc Nut
- x2 M6x20 Security Screw
- x4 2 Part Cover Cap
- x1 M6 Saddle Strap

Thread Lock Solution Required (Not Supplied)

MADE IN BRITAIN
BS EN 1176

Tools:

- x1 TX 30 Driver Bit
- x1 TX 40 Driver Bit

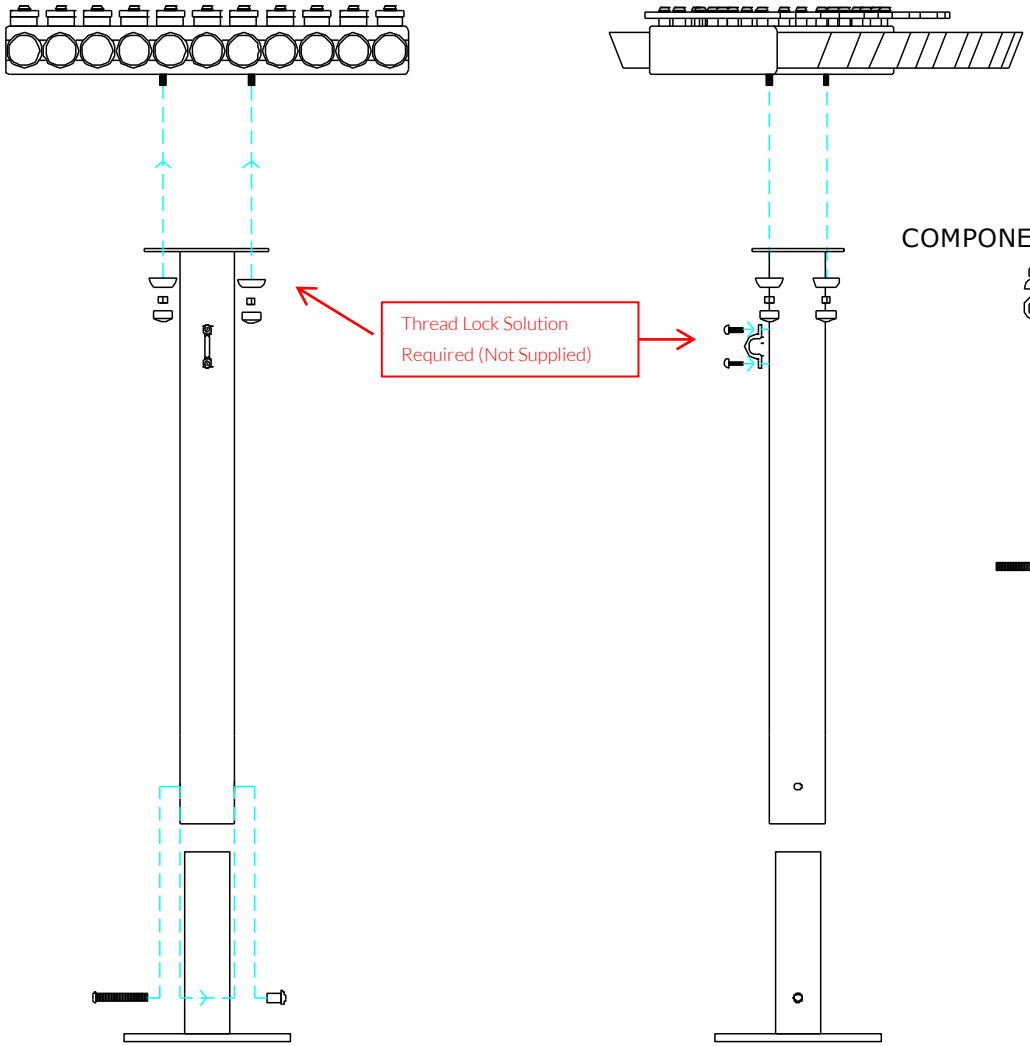

PPCADE FRONT

PPCADE SIDE

COMPONENTS LIST:

- 2 Part Cover Cap X4
- M8 Nyloc nut X4
- Saddle Strap X1
- M6x20 Pin torx X2
- M10x70 Pin torx X2
- M10 Barrel Nut Pin torx X2

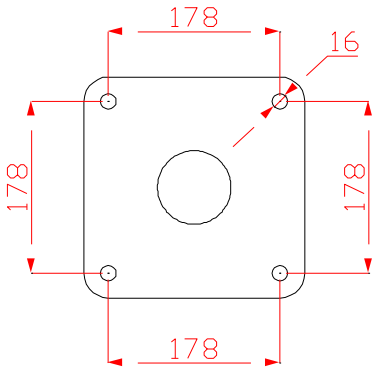

Pair Small Red Beaters X1

Surface Fix Components:

- x1 M10x70 Security Screw
- x1 M10 Barrel Nut
- x4 2 Part Cover Cap

Ground Anchors not supplied

Spares available from percussionplay.com or from your local distributor

18 -24Kg

Surface Fix Post Installation

Percussion Play
Outdoor Musical Instruments

Surface Fixed

Cadenza
Page 3 of 3

Components:

x1

M10 Barrel Nut

x1

M10x70 Security Screw

x4

2 Part Cover Cap

Thread Lock Solution Required (Not Supplied)

Metric Conversion:
50mm/ 2”
250mm/ 10”
350mm/ 14”
400mm/ 16”
450mm/ 18”

MADE IN BRITAIN

BS EN 1176

Tools:

x2

TX 45 Driver Bit

1

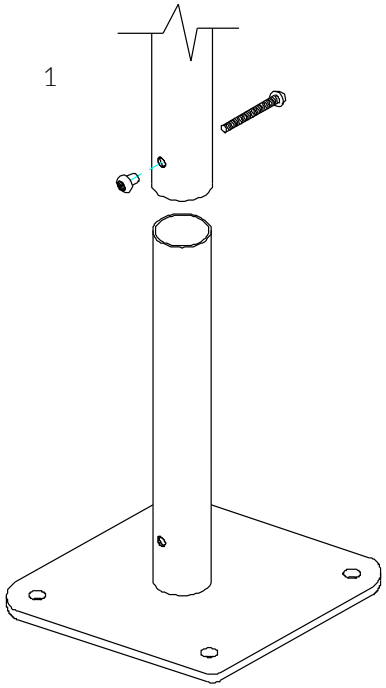

Locate the Surface fix Plate into the leg of the instrument.

2

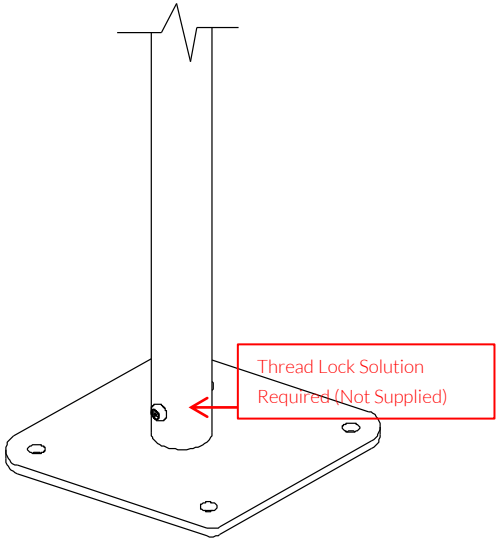

Fix instrument to Surface fix plate using M10 bolt and Barrel Nut and use **thread locking solution** to prevent fixings working loose.

3

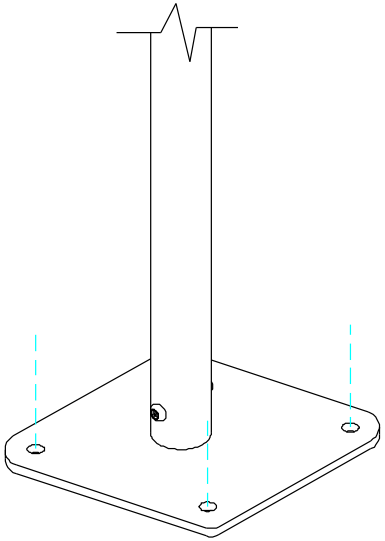

Fix Surface Plate to the ground surface **Ground Anchors Not provided** cover fixings with caps provided

Repeat Parts 1-3 for both legs